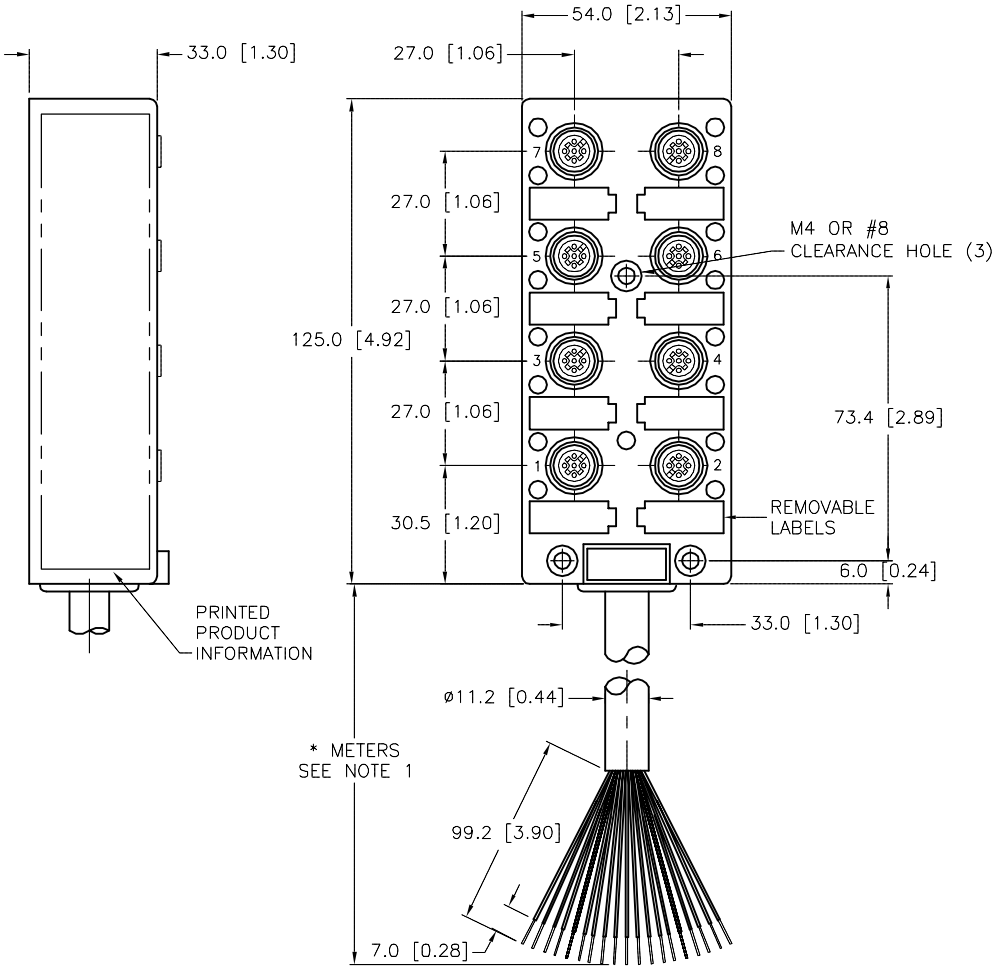

SPECIFICATIONS	
CABLE DATA	
OUTTER JACKET MATERIAL/COLOR	TPE/YELLOW
CONDUCTOR INSULATION MATERIAL	POLYESTER ELASTOMER
NUMBER OF CONDUCTORS [AWG]	3x18 AWG, 18x22 AWG
MATERIAL	
HOUSING/COLOR	NYLON/YELLOW
RECEPTACLE/PLATING	BRASS/NICKEL
CONTACT CARRIERS/COLOR	TPU/BLACK
CONTACTS/PLATING	BRASS/GOLD
SEALING RING	FKM/FPM
ELECTRICAL DATA	
OPERATING VOLTAGE	10–48 VDC
OPERATING CURRENT	3.0 AMPS PER PORT, 9.0 AMPS TOTAL
MECHANICAL DATA	
PROTECTION CLASS to DIN 40050	IP 67 ONLY WHEN ALL RECEPTACLES ARE COVERED WITH PLUGS OR CONNECTED
OPERATING TEMPERATURE	–30°C to +80°C (–25°F to +176°F)

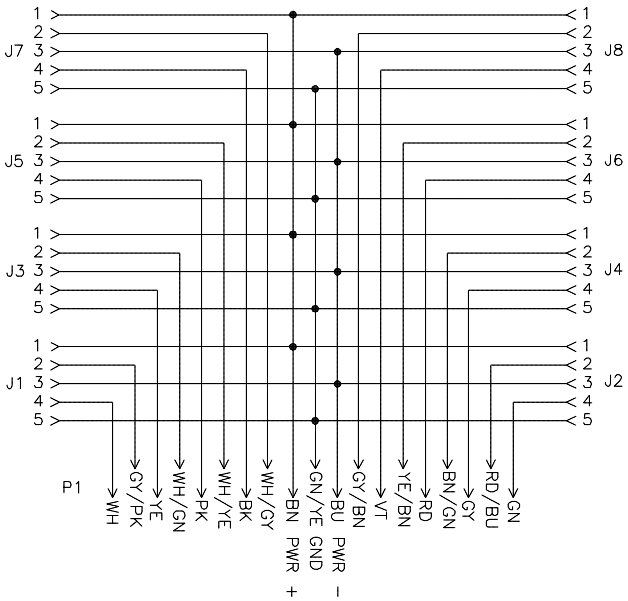

CONNECTORS J1–J8

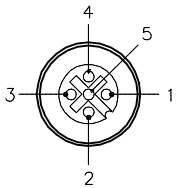

1 = VOLT (+)
2 = SIGNAL 2
3 = VOLT (–)
4 = SIGNAL 1
5 = GROUND

euro fast.

CLOSURE CAPS
(INCLUDED)

SOURCE DRAWING - FOR REFERENCE ONLY

CABLE LENGTH	TOLERANCE *
ALL LENGTHS	+ 4% (OR 50mm) OF LENGTH – 0% (OR 0mm) OF LENGTH WHICHEVER IS GREATER
STRIP LENGTH	**TOLERANCE ***
0–7mm	±0.5mm
8–29mm	±1.0mm
30–49mm	±2.0mm
50–69mm	±3.0mm
70–100mm	±4.0mm
OVER 100mm	±5.0mm
* UNLESS OTHERWISE SPECIFIED	

NOTES:

1. "*" INDICATES CABLE LENGTH IN METERS. CONTACT TURCK TO ORDER SPECIFIC LENGTHS.

2. "/S101" DESIGNATES FLEXLIFE–20 AND CTRACK CABLE.

3. UNUSED CONDUCTORS TRIMMED BACK TO CABLE JACKET ON BOTH ENDS.

REV	DESCRIPTION	BY	DATE	ECO NO.
I	UPDATED SEALING RING MATERIAL PER ECO	TV	08/11/16	56141

RELATED DOCUMENTS
1.
2.
3.
4.

3RD ANGLE PROJECTION

THIS DRAWING IS CONFIDENTIAL AND THE PROPERTY OF TURCK INC. USE OF THIS DOCUMENT WITHOUT WRITTEN PERMISSION IS PROHIBITED.

TURCK

3000 CAMPUS DRIVE
MINNEAPOLIS, MN 55441
1–800–544–7769
(763) 553–7300
(763) 553–0708 fax
www.turck.us

MATERIAL: SEE SPECIFICATIONS

FINISH: SEE SPECIFICATIONS

ALL DIMENSIONS DISPLAYED ON THIS DRAWING ARE FOR REFERENCE ONLY

CONTACT TURCK FOR MORE INFORMATION

DRFT: RDS | DATE: 01/23/03
APVD: | SCALE: 1=2.0

UNIT OF MEASUREMENT
MILLIMETER [INCH]
DO NOT SCALE THIS DRAWING

DESCRIPTION: VB 80.5–*/S101

IDENTIFICATION NO.:

REV: I

FILE: 777006658

SHEET 1 OF 1

Approved 08/16/2016, work order #112171 by R.W